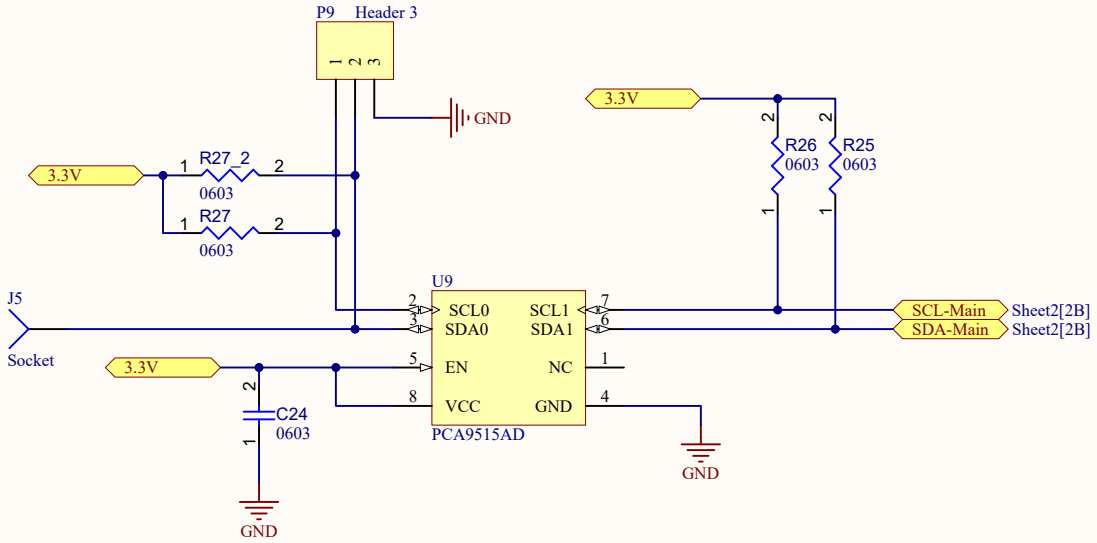

Title		
Size A4	Number	Revision
Date: 7/16/2025		Sheet of
File: C:\Users\..\Sheet1.SchDoc		Drawn By:

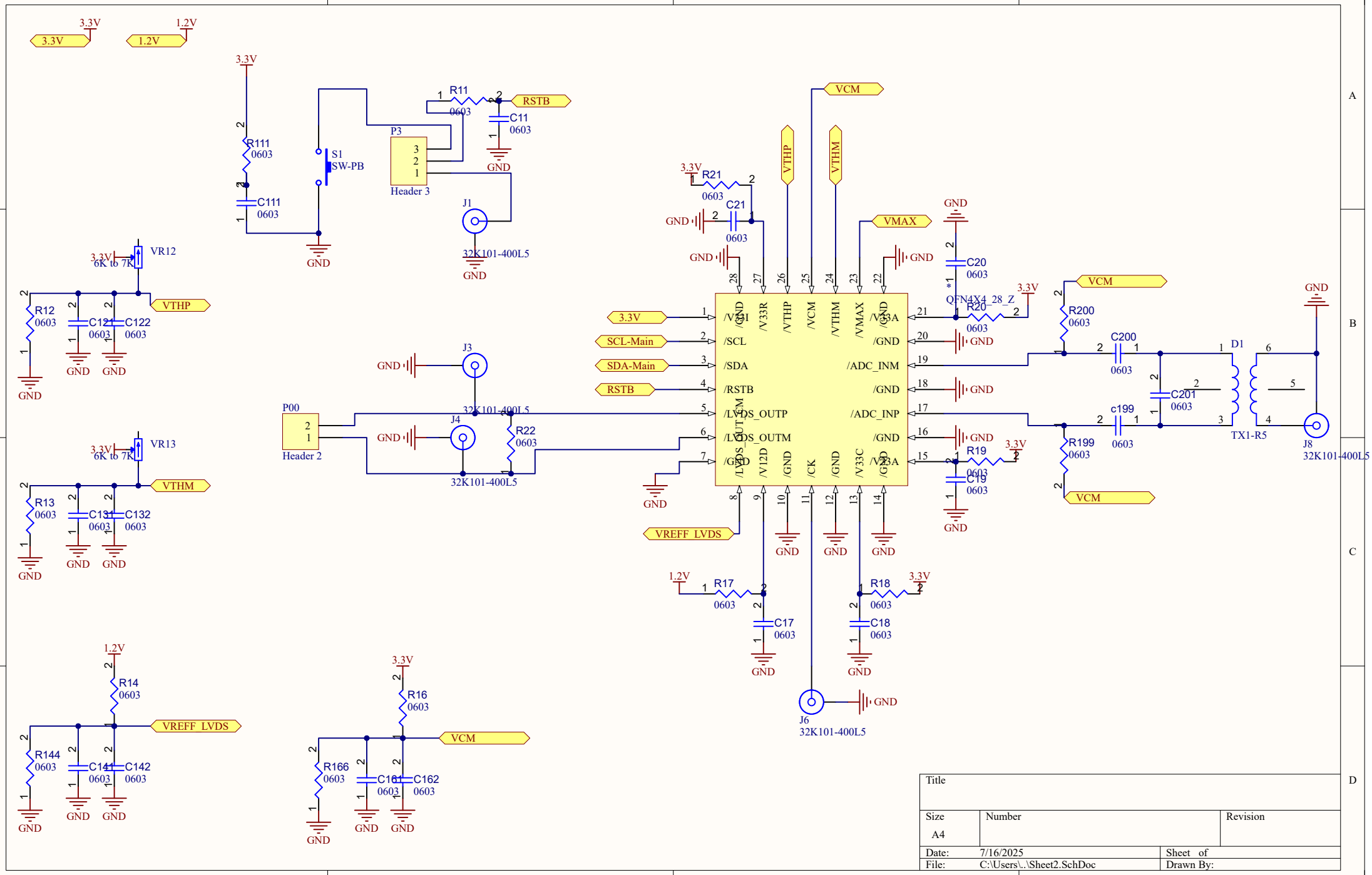
3.3V
1.2V
R111
0603
C111
0603
S1
SW-PB
P3
Header 3
R11
0603
C11
0603
RSTB
GND
J1
32K101-400L5
VR12
6K to 7K
R12
0603
C121
0603
C122
0603
VTHP
VR13
R13
0603
C131
0603
C132
0603
VTHM
P00
Header 2
J3
J4
32K101-400L5
R22
0603
R14
0603
R144
0603
C141
0603
C142
0603
VREFF_LVDS
R16
0603
R166
0603
C161
0603
C162
0603
VCM
R21
0603
C21
0603
VMAX
C20
0603
QFN4X4_28_Z
R20
0603
/V33L
/V33R
/VTHP
/VCM
/VTHM
/VMAX
/V33A
/SCL
/SDA
/RSTB
/LVDS_OUTP
/LVDS_OUTM
/ADC_INM
/ADC_INP
/V12D
/CK
/V33C
SCL-Main
SDA-Main
R200
0603
C200
0603
C201
0603
D1
TX1-R5
J8
32K101-400L5
R199
0603
c199
0603
R19
0603
C19
0603
R17
0603
C17
0603
R18
0603
C18
0603
J6
32K101-400L5
Title
Size
A4
Number
Revision
Date:
7/16/2025
Sheet of
File:
C:\Users\..\Sheet2.SchDoc
Drawn By:

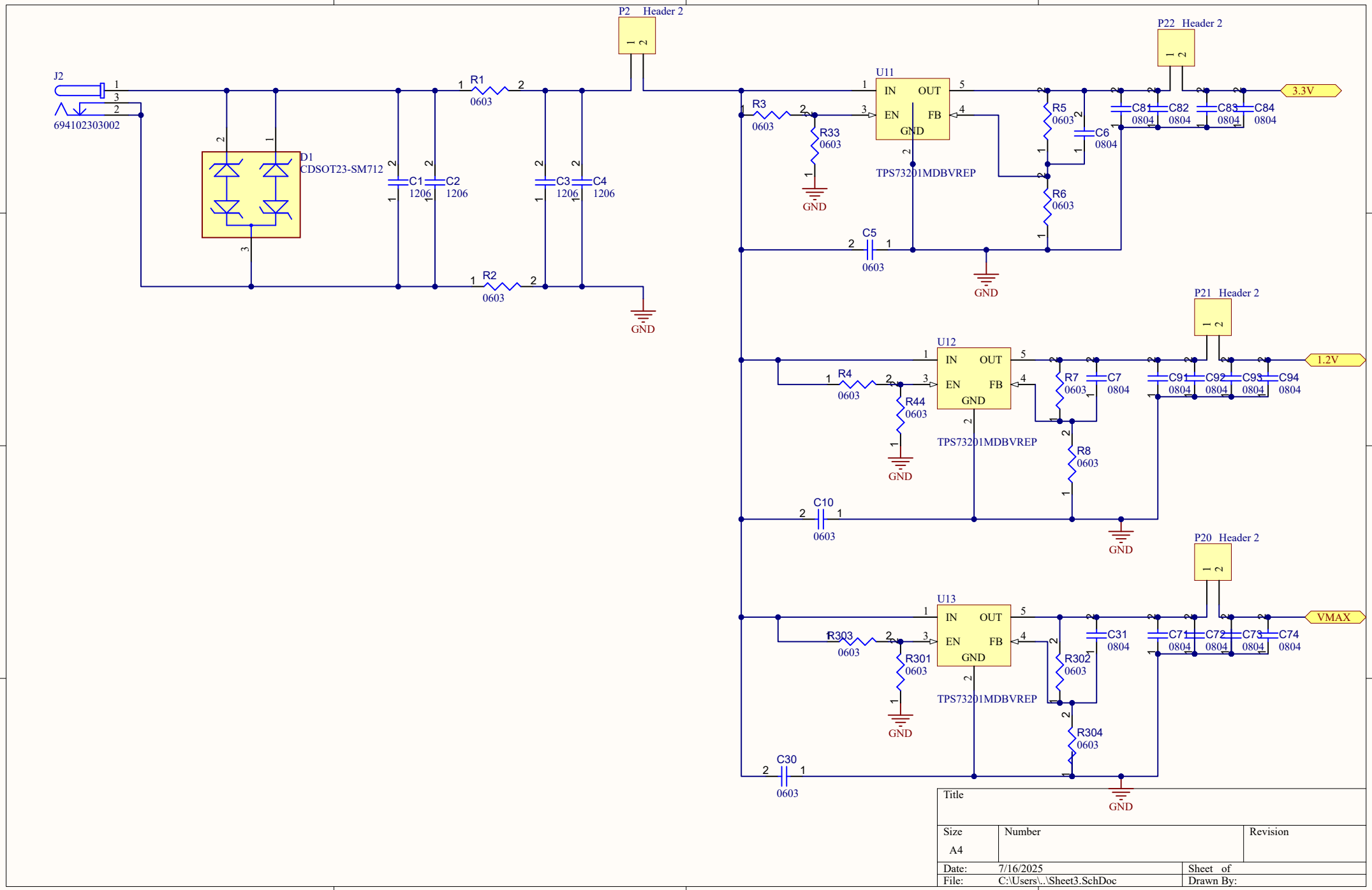

Title		
Size A4	Number	Revision
Date: 7/16/2025		Sheet of
File: C:\Users\..\Sheet3.SchDoc		Drawn By:

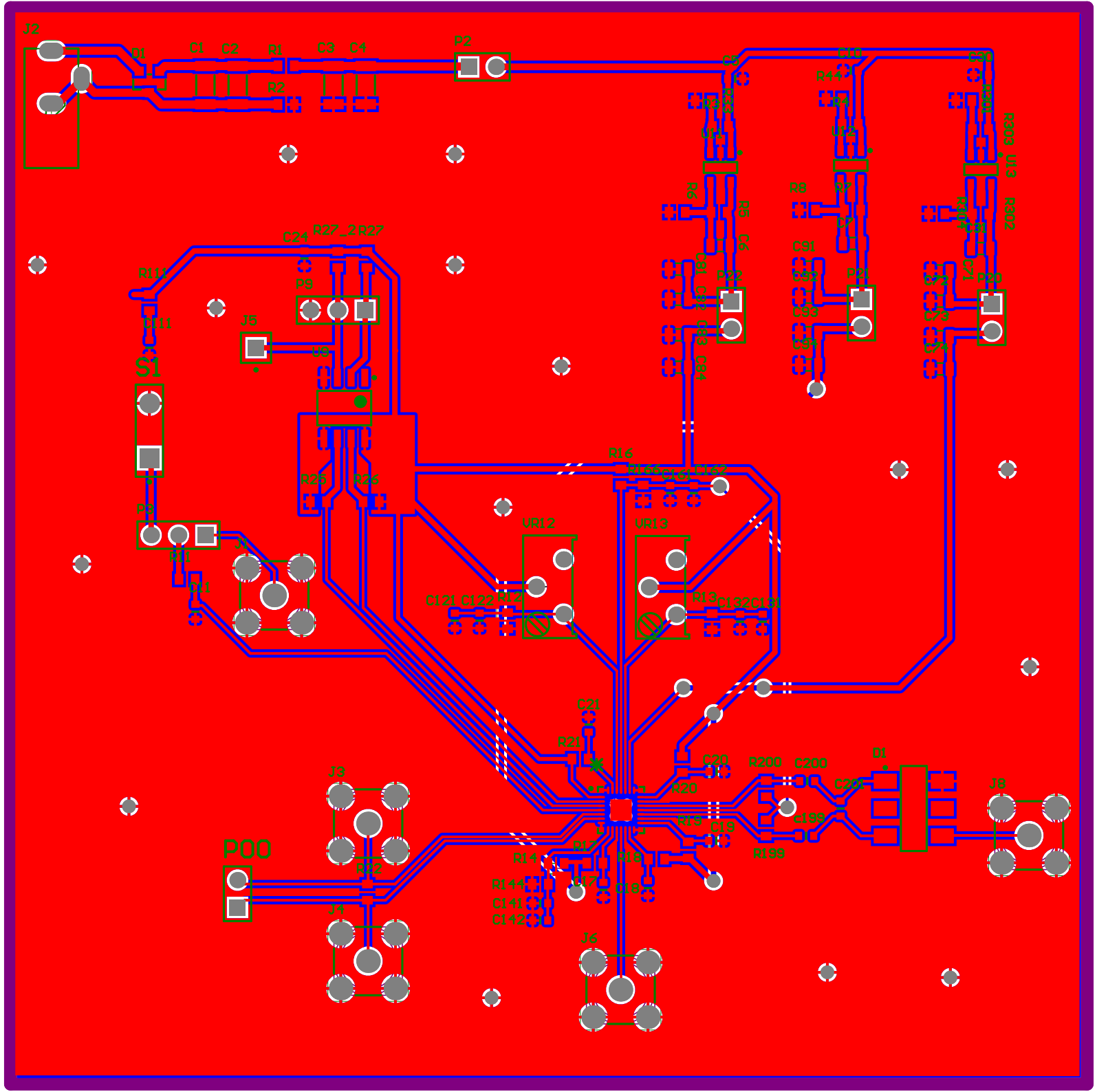
J2
D1
C1
C2
R1
C3
C4
P2
R2
C5
C10
C20
R14
R3
U2
U3
R8
R7
R6
R9
R10
R11
R12
R13
R15
R16
R17
R18
R19
R20
R21
R22
R23
R24
R25
R26
R27_2
R27
C24
C91
C92
C93
C94
C95
C96
C97
C98
C99
C100
C101
C102
C103
C104
C105
C106
C107
C108
C109
C110
C111
C112
C113
C114
C115
C116
C117
C118
C119
C120
C121
C122
C131
C132
C133
C141
C142
C144
C200
C201
C202
C203
C204
C205
C206
C207
C208
C209
C210
C211
C212
C213
C214
C215
C216
C217
C218
C219
C220
C221
C222
C223
C224
C225
C226
C227
C228
C229
C230
C231
C232
C233
C234
C235
C236
C237
C238
C239

Doc | PCB1.PcbDoc | Home Page | [2] Sheet2.SchDoc | [3] Sheet3.SchDoc

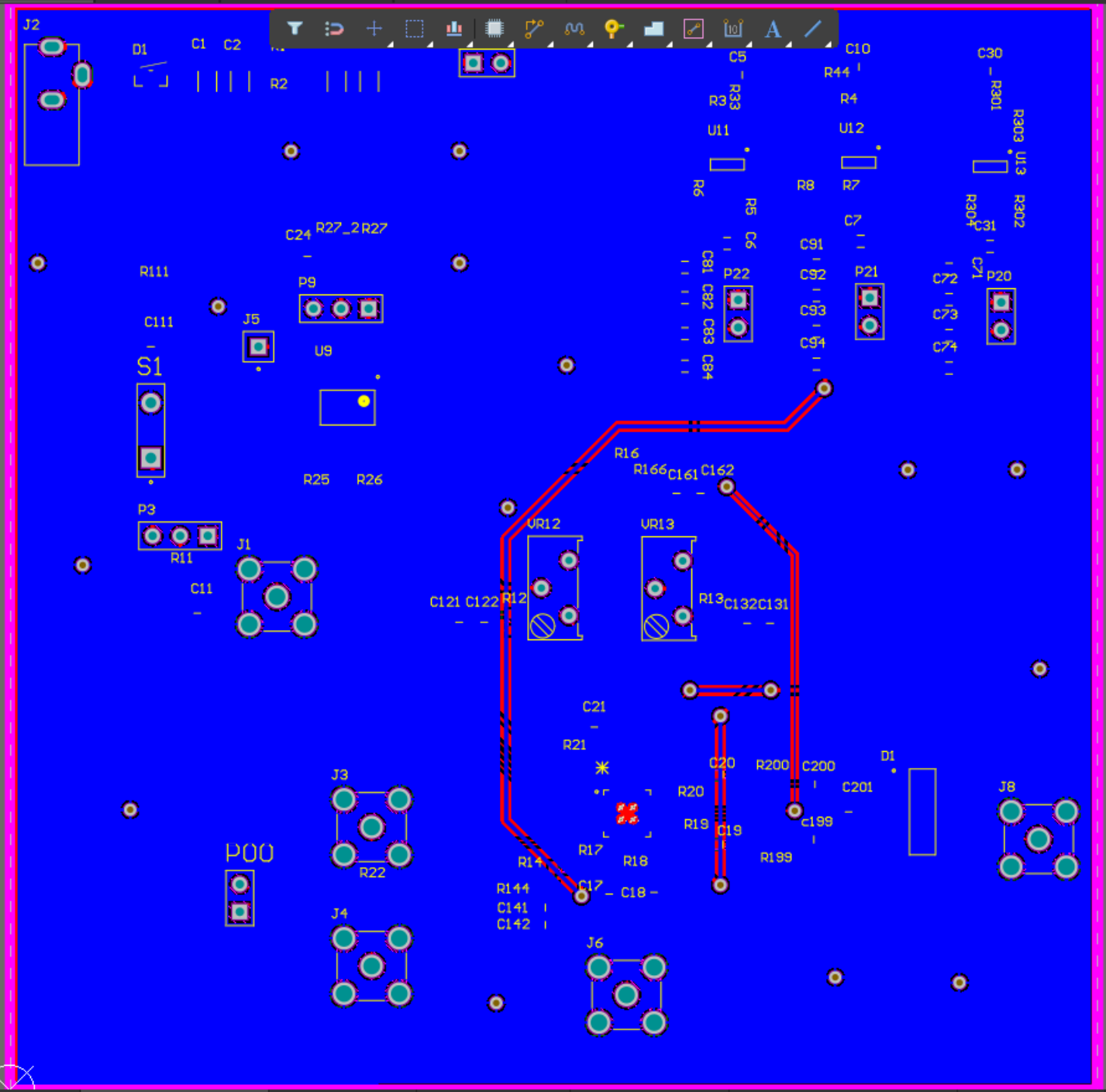

[1] Top Layer | [2] Bottom Layer | Mechanical 1 | Top Assembly | Top Courtyard | Top Component Center | Mechanical 8

Reports Window Help

PCB1.PcbDoc | Home Page | [2] Sheet2.SchDoc | [3] Sheet3.SchDoc

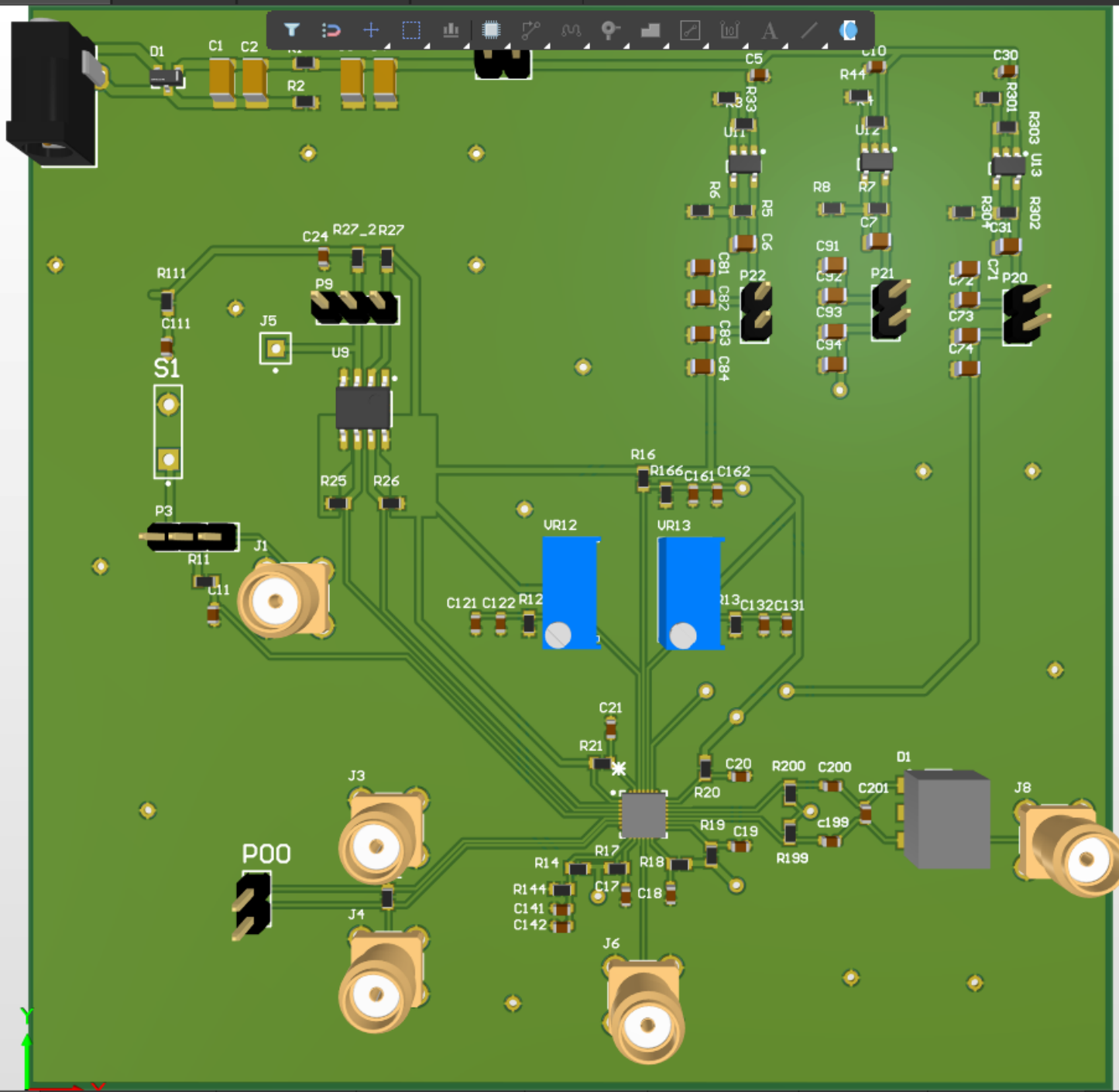

Top Layer | [2] Bottom Layer | Top Overlay | Bottom Overlay | Top Paste | Bottom Paste | Top Solder | Bottom Solder

PCB1.PcbDoc | Home Page | [2] Sheet2.SchDoc | [3] Sheet3.SchDoc

p Layer | [2] Bottom Layer | Top Overlay | Bottom Overlay | Top Paste | Bottom Paste | Top Solder | Bottom Solder